CRES COR®
5925 Heisley Road • Mentor, OH 44060-1833

OPERATING and MAINTENANCE INSTRUCTIONS
H135UA11 Hot Cabinet (Aluminum)
H135SUA11 Hot Cabinet (Stainless Steel)

Model No.	Volts	Watts	Amps	Hertz	Phase	NEMA
H135UA11 H135SUA11	120	1470	12.3	60	1	5-15P
H135UA11240 H135SUA11240	240	1470	6.1	60	1	6-15P

All are designed for AC service. The above model numbers may be followed by "***M***", "***L***", "***D***", "***R***" and ending with "***S***" or "***Z***".

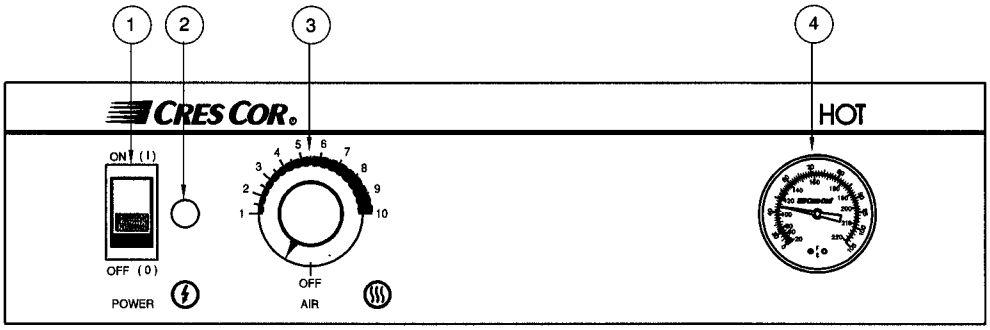

CONTROL PANEL PARTS IDENTIFICATION

1. Power Switch
2. Yellow Light-Power
3. Thermostat
4. Thermometer

HOW TO INSTALL UNIT:

1. Place cabinet near warm ovens. Do *NOT* put in drafty areas or near ventilating systems.
2. Plug cord end into proper wall outlet.

NOTE: No. 8 setting = approx. 190°F (88°C)
No. 6 setting = approx. 165°F (74°C)

Proper food holding temperature is 140°F (60°C) or higher. The thermometer shows the temperature inside.

HOW TO START UNIT:

1. Turn the POWER switch on. The *yellow* light will turn on.
2. Turn thermostat to #10.
3. Preheat cabinet for 30 minutes.
4. Put food into cabinet.
5. Turn thermostat to #8 and close door.

TO TURN OFF UNIT:

1. Turn thermostat off.
2. Turn the POWER switch off.
3. The *yellow* light will go out.

CRES COR®
5925 Heisley Road • Mentor, OH 44060-1833

OPERATING and MAINTENANCE INSTRUCTIONS
H135UA11 Hot Cabinet (Aluminum)
H135SUA11 Hot Cabinet (Stainless Steel)

MAINTENANCE

HOT UNIT REMOVAL INSTRUCTIONS:

1. Unplug power cord from wall outlet.
2. Pull entire unit out the front of the cabinet.

WARNING

RISK OF FIRE OR ELECTRIC SHOCK
DO NOT OPEN

WARNING: TO REDUCE THE RISK OF FIRE OR ELECTRIC SHOCK,

DO NOT REMOVE COVER (OR BACK)

NO USER-SERVICEABLE PARTS INSIDE

REPAIR SHOULD BE DONE BY AUTHORIZED SERVICE PERSONNEL ONLY

HOW TO CLEAN THE CABINET:

WARNING ***BEFORE*** **cleaning the cabinet:**

1. **Allow cabinet to cool.**
2. **Remove Hot unit from cabinet.**
3. **Do NOT use abrasives or harsh chemicals.**

Cleaning Notes:

1. Wipe up spills as soon as possible.
2. Clean cabinet regularly to avoid heavy dirt build-up.
3. Make a test spot with cleaner.
4. Follow manufacturer's directions on cleaner.
5. Do not mix cleaners.
6. Avoid drips and splashes.

HOW TO CLEAN UNIT:

	Soil	Cleaner	Method
DOORS Vinyl (Out) Aluminum (In)	Dirt, Grease and Oil	Mild Detergent* and water.	1. Wipe with soft, damp cloth. 2. Rinse well.
CABINETS (H137UA11 is Aluminum) (H137SUA11 is Stainless Steel)	Dirt	Mild detergent* and hot water, or mild abrasive cleaner.	1. Use soft, damp cloth. 2. Rinse with hot water. 3. Wipe dry.
		Steam (No strong alkaline additive)	1. Rinse after steam cleaning. 2. Wipe dry.
	Fingerprints, Grease and Oil	Chemical oven cleaner for cabinet material	Follow oven manufacturer's directions
		Mild abrasive cleaner; oily or waxy cleaner	Apply with clean, soft cloth. Wipe with damp cloth.
	Water Spots	Mild abrasive cleaner. Oily of waxy cleaner.	Apply with soft, clean cloth. Wipe with damp cloth.

OPERATING and MAINTENANCE INSTRUCTIONS
H135UA11 Hot Cabinet (Aluminum)
H135SUA11 Hot Cabinet (Stainless Steel)

TROUBLE-SHOOTING CHART:

FAILURE	POSSIBLE CAUSE
1. *Yellow* light at switch does NOT light.	1a. Circuit breaker/fuse to wall outlet is blown. 1b. Cord is unplugged from wall outlet. 1c. Switch is "*OFF*".
2. Unit does not heat.	2a. Thermostat set too low or is "*OFF*". 2b. Switch is "*OFF*".
3. Unit gets too hot or won't shut off.	3a. Defective electrical parts. **UNPLUG UNIT FROM WALL OUTLET.**
4. Blower does not work or makes noise.	4a. Defective blower.

NOTE: Optional digital thermometer will flash if cabinet temperature is below 140° F or above 250° F. Call the factory if you need different settings.
If cause is none of the above, refer to our list of Authorized Service Centers, FL-1400.

REPLACEMENT PARTS:

DESCRIPTION	120 VOLT	240 VOLT
Hot Unit (H35UA11)	HU-1254-058	HU-1254-059
Hot Unit (H135SUA11)	HU-1254-062	HU-1254-063
Blower Kit	0769-180	0769-182-K
Heater Kit	0811-019	0811-020
Thermostat Kit	0848-062-K	0848-062-K
Thermometer Kit (Analog)	5238-030-K	5238-030-K
Power Cord	0810-029	0810-039
Power Switch	0808-116	0808-116
Power Light	0766-094	0766-095
Terminal Block	0852-091	0852-091

CABINET	
Door Latch	1006-154-01
Door Hinge	0519-104
Pan Slides	0621-181
Door Assembly, Silver	1200-495-BL
Door Assembly, Red	1200-499-BL
Door Gasket	0861-259

CRES COR®
5925 Heisley Road • Mentor, OH 44060-1833

OPERATING and MAINTENANCE INSTRUCTIONS
H135UA11 Hot Cabinet (Aluminum)
H135SUA11 Hot Cabinet (Stainless Steel)
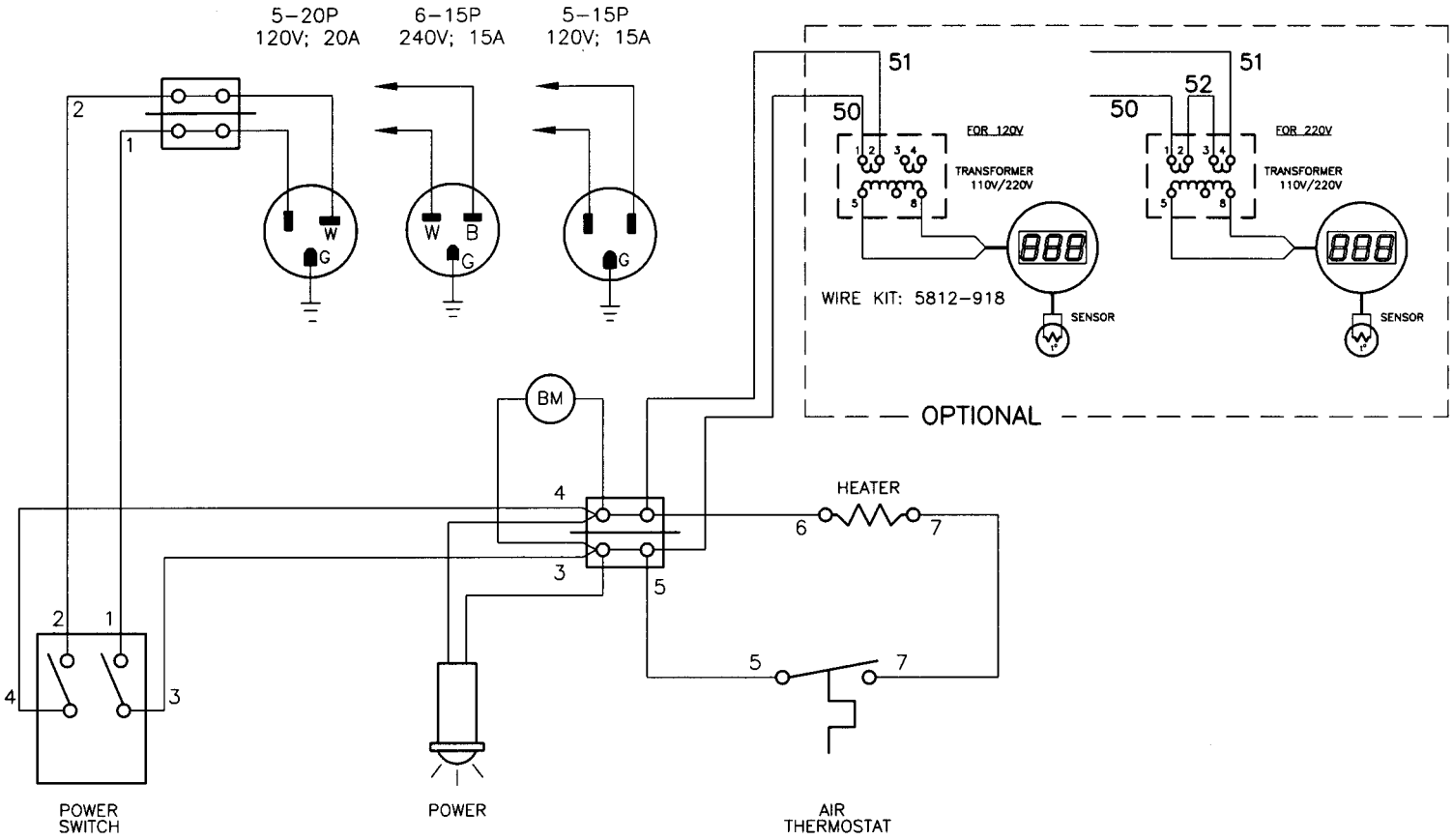
WIRING DIAGRAM: